DC Panel Wiring 1

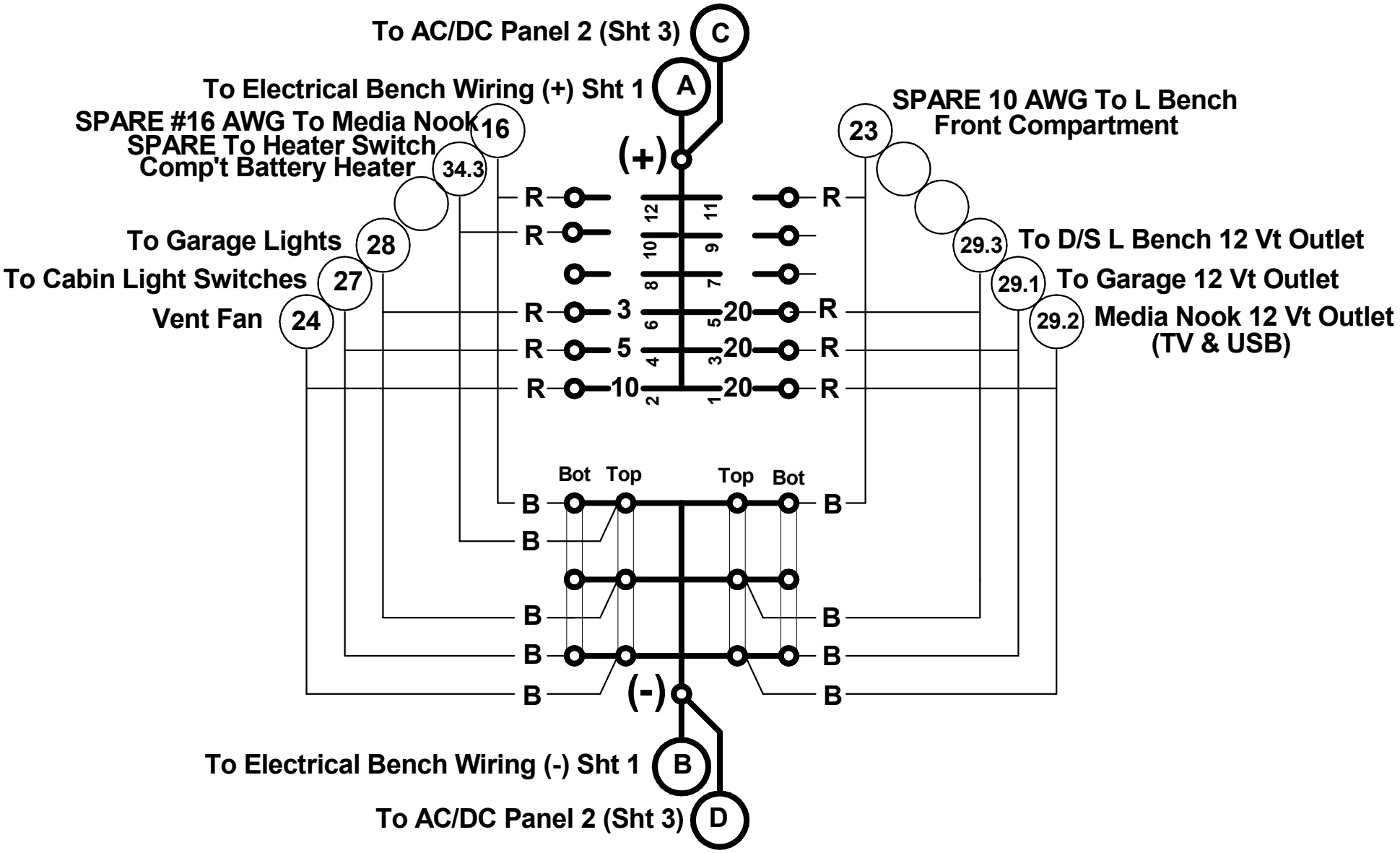

Sheet 2